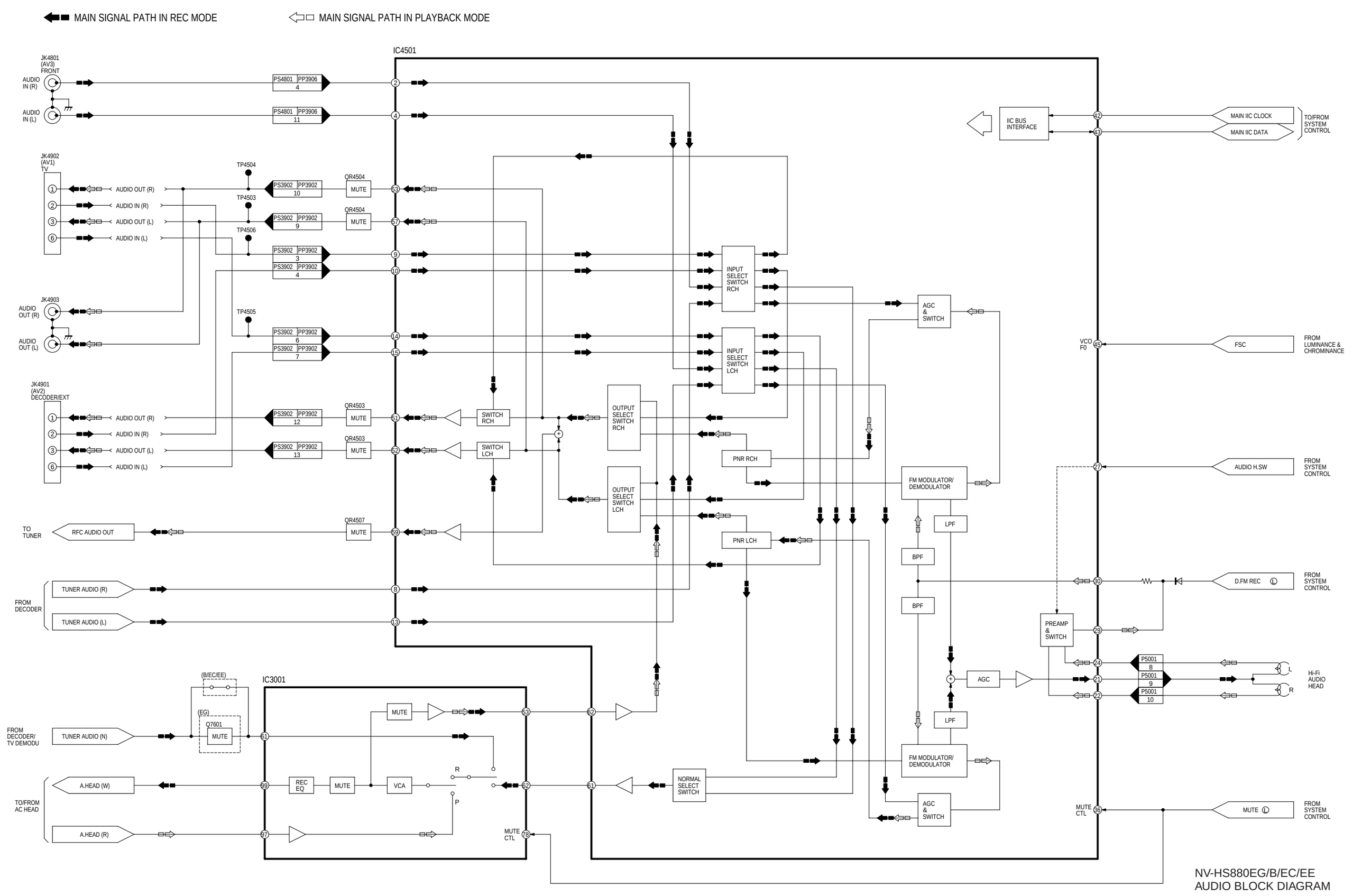

NV-HS880EG/B/EC/EE
AUDIO BLOCK DIAGRAM