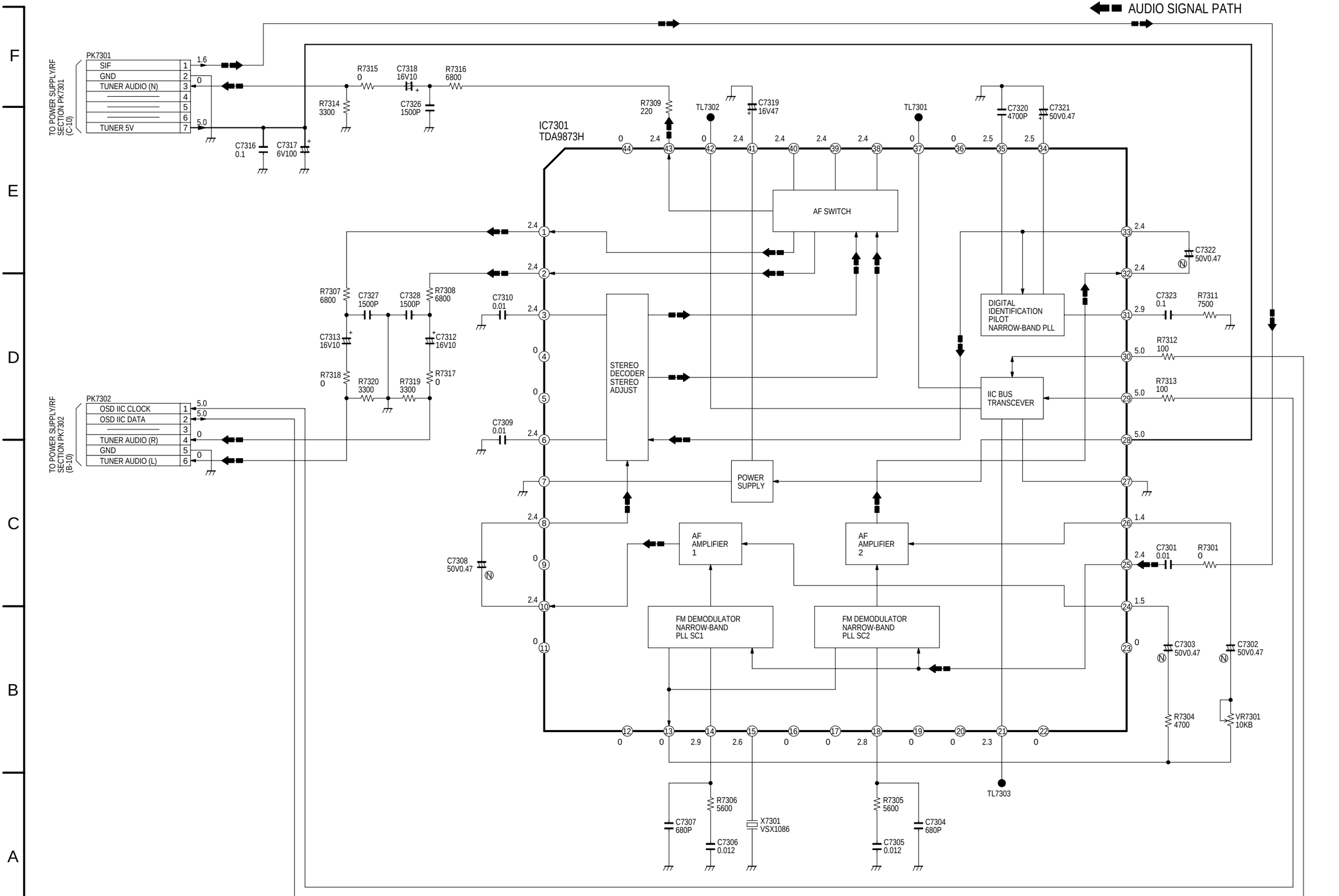

NOTE:THE MEASUREMENT MODE OF THE DC VOLTAGE ON THIS DIAGRAM IS STOP MODE.

NOTE: DO NOT USE ANY PART NUMBER SHOWN ON THIS SCHEMATIC DIAGRAM FOR ORDERING. WHEN YOU ORDER A PART,PLEASE REFER TO PARTS LIST.

NV-HS880EG
DECODER PACK SCHEMATIC DIAGRAM